VERSION	CHANGES	CHECKED	DATE	APPROVED	DATE

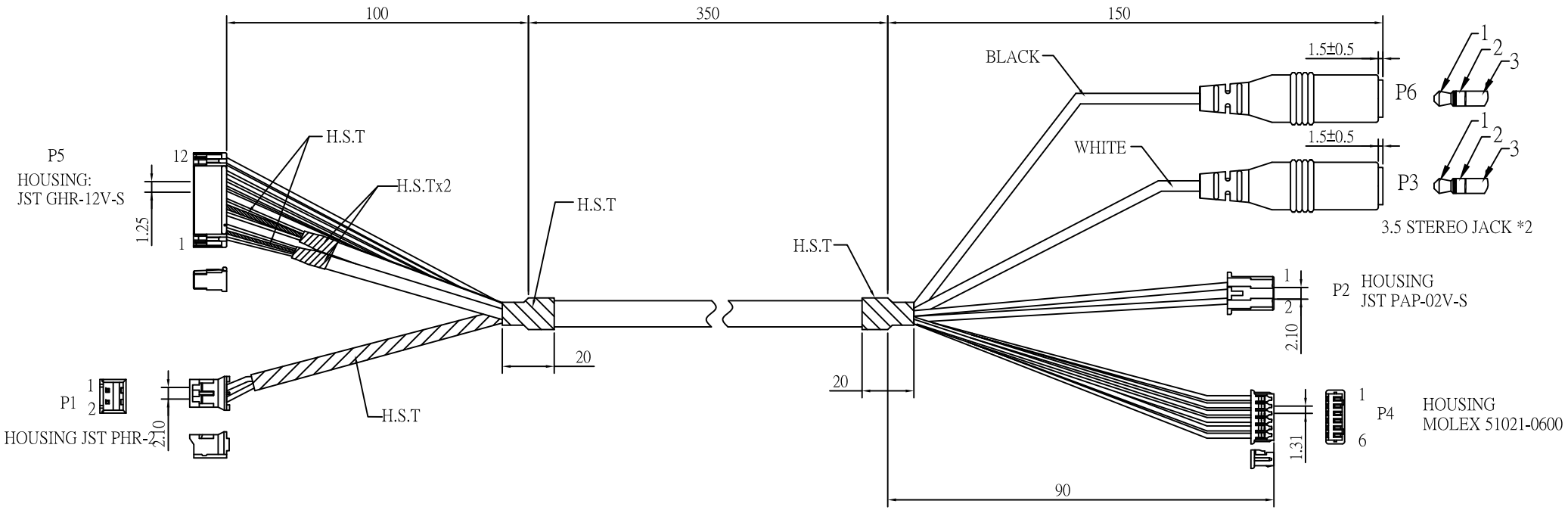

CONNECTOR WIRING:

P1	P2	WIRE	
2	2	RED	#24
1	1	BLACK	#24

P5	P6	P3	P4	WIRE	
6	1			WHITE	#28
4	2			RED	#28
5	3			GROUND	
3		1		YELLOW	#28
1		2		BLUE	#28
2		3		GROUND	
12			6	VIOLET	#28
11			5	BROWN	#28
7			4	GREEN	#28
8			3	RED	#28
9			2	GREY	#28
10			1	BLACK	#28

NOTES:

1. WIRE: UL20276 {(28AWGx2C+S.S)x2.7]x2C+24AWGx2C+28AWG*6C}
   OD6.5±0.19 BLACK
2. ASSEMBLE IN ACCORDANCE WITH IPC-A-620
3. ASSEMBLE TO CONRORM TO DIRECTIVE 2002/95/EC (RoHS)
4. TEST:
   FUNCTION 100% TEST, NO OPEN, NO SHORT, NO INT,

EST WWW.ESTCABLE.COM	☑ RoHS	☐ REACH	☐	
	DESCRIPTION: CCTV CABLE			
CN: XX	DRAW NO: E-01-001		PAGES: 1 OF 2	
P/N: E-01-001			DATE: 2013.5.12	
SCALE: N/A			UNIT: MM	
SAMPLE No:				
DWG: FENNY	CHECK:		APPROVED:	

ABO	UNT	TOL
	10	±1
10	50	±3
50	100	±5
100	500	±10
500	1000	±30
1000	2000	±50

NO.	DESCRIPTION	MATERIALS	VENDOR	COLOR	QTY